DISTRIBUTED BY: www.leedan.com info@leedan.com Toll-Free: 800-231-1414

0706 Ⓐ

AIPHONE®

GH SERIES

Apartment Intercom System

QuikStart Installation Guide

ATTENTION:

This is an abbreviated Installation Manual, addressing Wiring and Programming of the GH System only. The complete GH System Installation and Operation Manual is located on the CD that comes with the GH-BC Bus Control Unit. Access the PDF file from the CD and print the entire manual if a hard copy is needed. If installing a digital entry system, the program for loading names and numbers for each tenant is also located on the CD.

DISTRIBUTED BY: www.leedan.com info@leedan.com Toll-Free: 800-231-1414

Standard system

1P(Audio)
1P(Video)
1P

Capacity
5 Entrance stations
2 Security guard stations
48 Residential stations

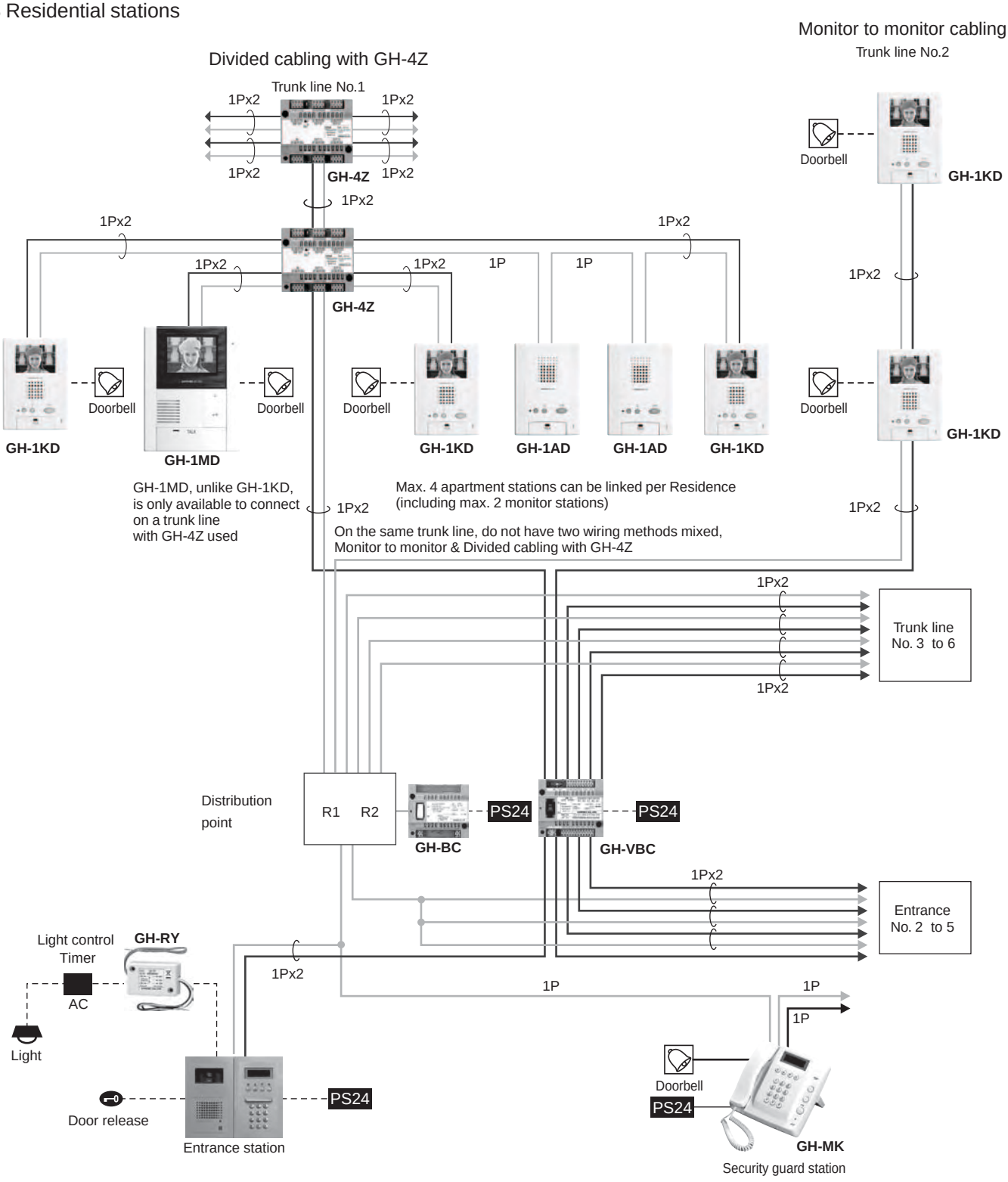

Cable: 1P x 2, 2-conductor cable solid copper & non-braided, polyethylene insulation
Use Aiphone Wire #872002 for Audio, Aiphone Wire #871802 for Video.

DISTRIBUTED BY: www.leedan.com info@leedan.com Toll-Free: 800-231-1414

Wiring

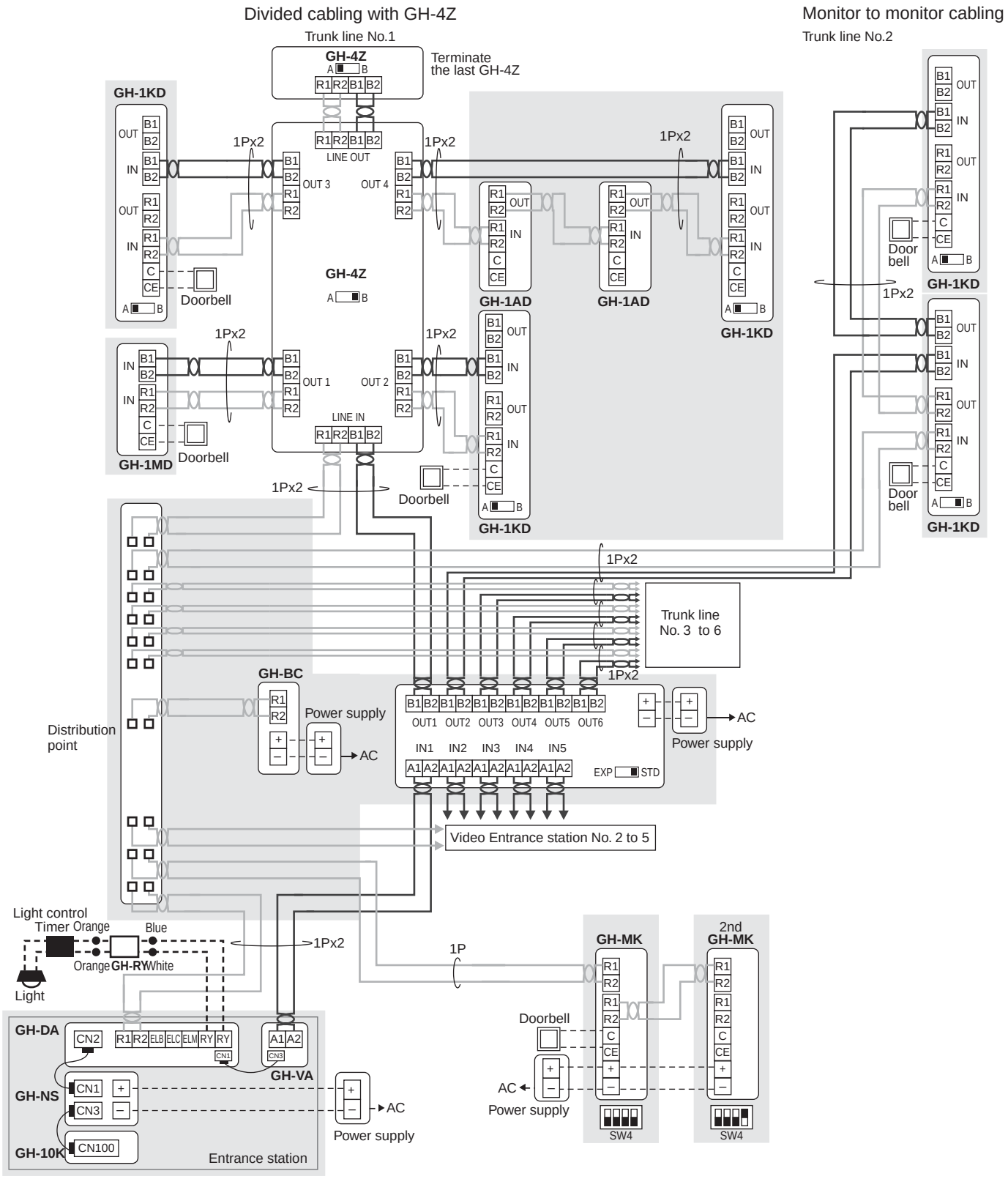

DISTRIBUTED BY: www.leedan.com info@leedan.com Toll-Free: 800-231-1414

1 SYSTEM CONFIGURATIONS

1-1

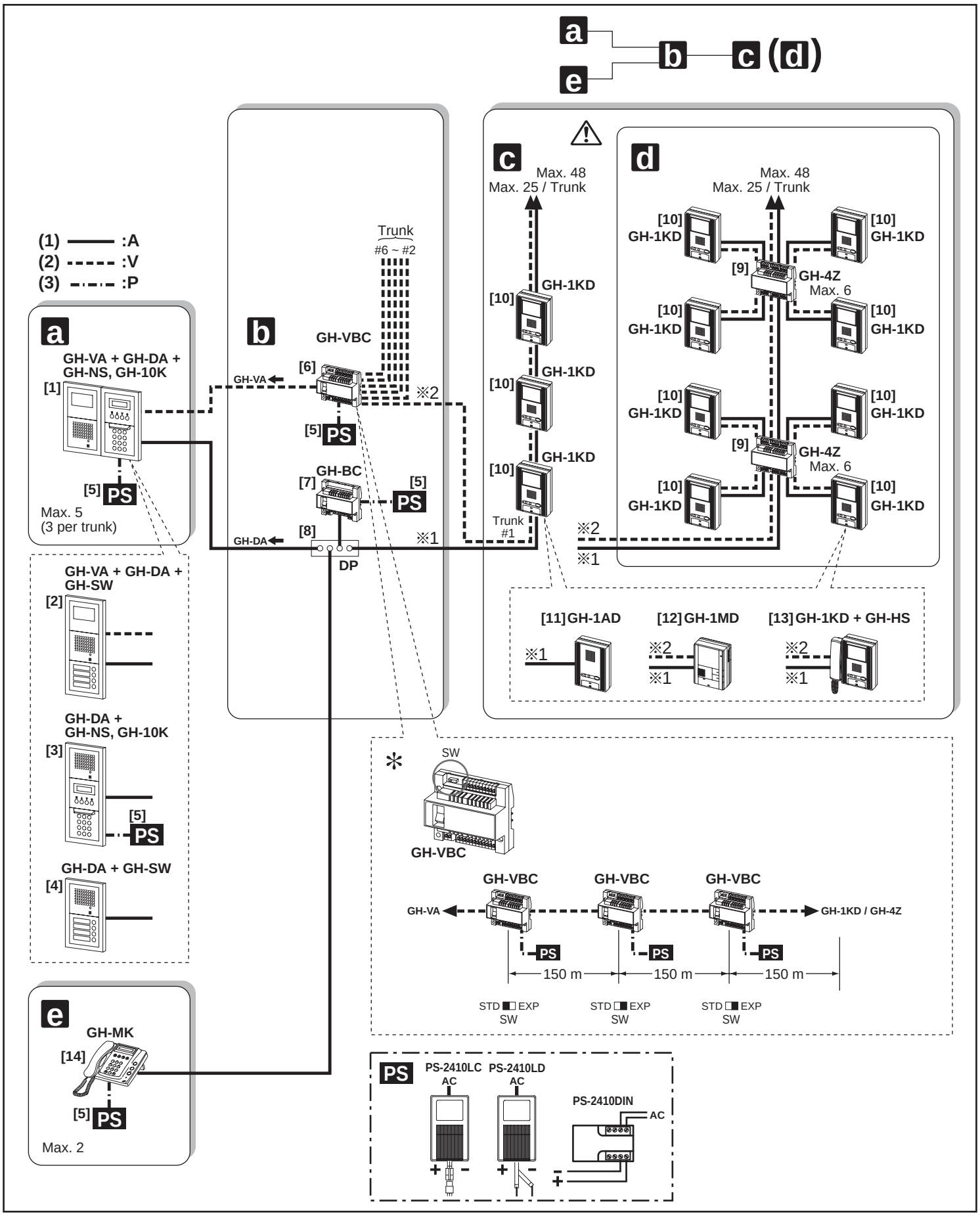

DISTRIBUTED BY: www.leedan.com info@leedan.com Toll-Free: 800-231-1414

1-1

Standard System Configuration Diagram

(1) Audio signal line
(2) Video signal line
(3) Power supply line
a. Entrance station (For details, see 2-1 and 2-2)
[1] Video/audio + digital name scrolling type
GH-VA + GH-DA + GH-NS, GH-10K
[2] Video/audio + direct selection type
GH-VA + GH-DA + GH-SW
[3] Audio + digital name scrolling type
GH-DA + GH-NS, GH-10K
[4] Audio + direct selection type
GH-DA + GH-SW
b. Bus control units
[5] Power supply adapter PS-2410LC, PS-2410LD, PS-2410DIN
[6] Video bus control unit GH-VBC
* GH-VBC can be used as an extension adapter as well. To do so, set the setting switch to "EXP." (2 units per trunk line)
[7] Bus control unit GH-BC
[8] Distribution terminal (junction): sold separately, not available from Aiphone.
c. Residential station (For details, see 2-4): Station-to-station wiring.
d. Residential station (For details, see 2-4): Homerun wiring
⚠Do not mix station-to-station wiring and homerun wiring.
[9] 4-way video junction unit GH-4Z
[10] Color video residential station GH-1KD
[11] Audio residential station GH-1AD
[12] Black &White video residential station GH-1MD
[13] Color video residential station +handset (option) GH-1KD + GH-HS
e. Security Guard Station
[14] Security guard station GH-MK

	Capacity
Entrance Station	Maximum 5 stations (up to 3 stations per trunk)
Residential Station	Maximum 48 stations (up to 25 stations per trunk)
Security Guard Station	Maximum 2 stations
Residential stations in the same residence	Maximum 4 stations (up to 2 monitor stations)
4-way video junction unit	Maximum 6 units per trunk

1-2

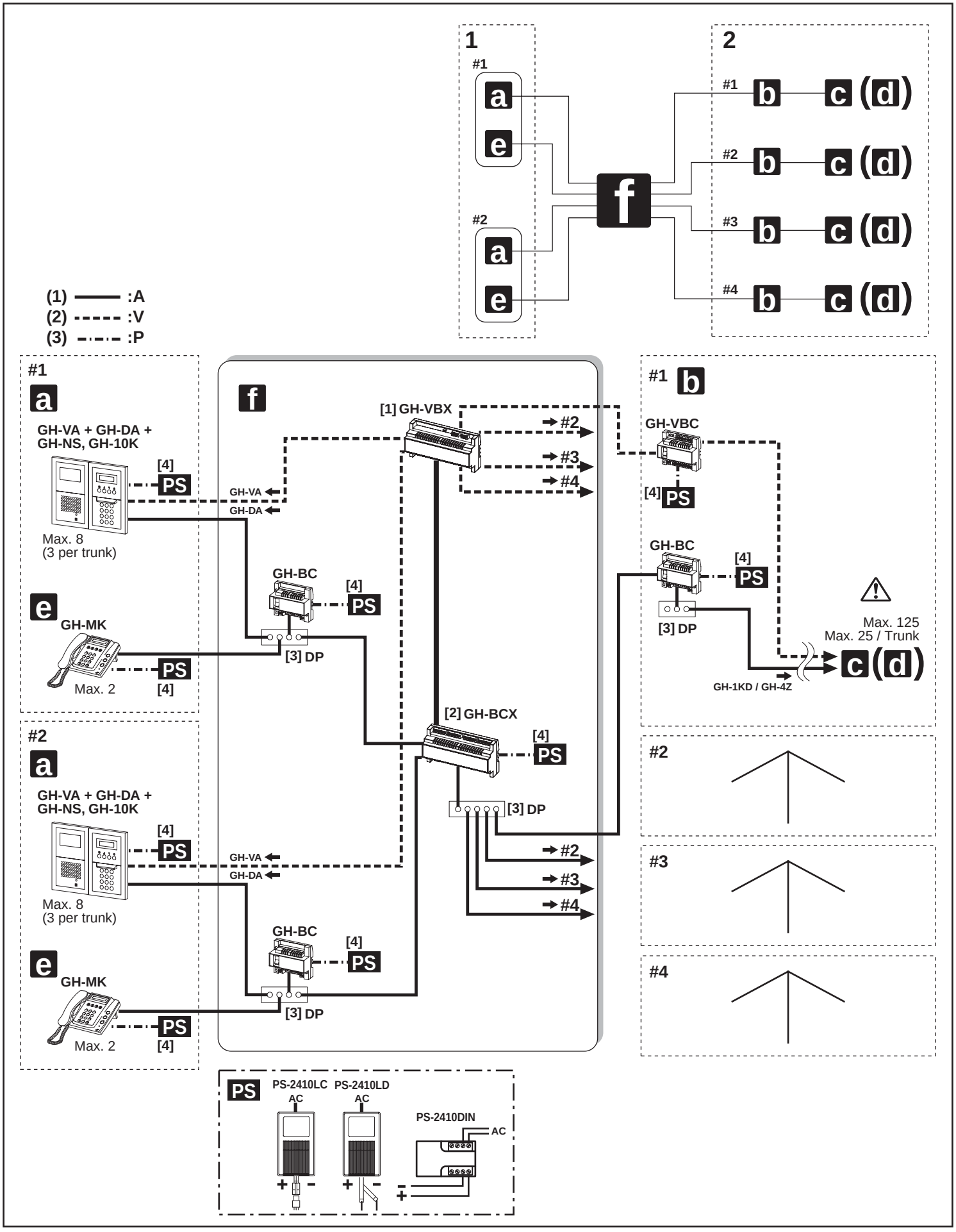
1
#1
a
e
#2
a
e
f
2
#1 b c (d)
#2 b c (d)
#3 b c (d)
#4 b c (d)
(1) :A
(2) :V
(3) :P
#1
a
GH-VA + GH-DA +
GH-NS, GH-10K
[4] PS
Max. 8
(3 per trunk)
e
GH-MK
PS
Max. 2
[4]
f
[1] GH-VBX
#2
#3
#4
GH-VA
GH-DA
GH-BC
[4] PS
[3] DP
[2] GH-BCX
[4] PS
[3] DP
#2
#3
#4
#2
a
GH-VA + GH-DA +
GH-NS, GH-10K
[4] PS
Max. 8
(3 per trunk)
GH-VA
GH-DA
GH-BC
[4] PS
e
GH-MK
PS
Max. 2
[4]
[3] DP
#1 b
GH-VBC
[4] PS
GH-BC
[4] PS
[3] DP
Max. 125
Max. 25 / Trunk
c (d)
GH-1KD / GH-4Z
#2
#3
#4
PS
PS-2410LC
AC
PS-2410LD
AC
PS-2410DIN
AC

DISTRIBUTED BY: www.leedan.com info@leedan.com Toll-Free: 800-231-1414

1-2

Expanded System Configuration Diagram

1. Common trunk line #1, 2
2. Sub trunk line #1 - 4
   Sub trunk line #2 - #4 are the same as #1. Maximum 125 units per sub trunk line.
   (1) Audio signal line
   (2) Video signal line
   (3) Power supply line

a. Entrance station (For details, see 2-1 and 2-2)
b. Bus control unit
c. Residential station (For details, see 2-4):
   Station-to-station wiring (For details, see 3-2)
d. Residential station (For details, see 2-4):
   Homerun wiring (For details, see 3-3)

⚠ Do not mix station-to-station wiring and homerun wiring.

e. Security Guard Station
f. Expanded bus control unit

[1] Expanded video bus control unit GH-VBX
[2] Expanded bus control unit GH-BCX
[3] Distribution terminal (junction): sold separately
[4] Power supply adapter PS-2410LC, PS-2410LD, PS-2410DIN

	Capacity
Entrance Station	Maximum 16 stations (up to 3 stations per trunk)
Residential stations per sub trunk line	Maximum 125 stations (up to 25 stations per trunk)
Residential Station	Maximum 500 stations
Security Guard Station	Maximum 4 stations
Residential stations in the same residence	Maximum 4 stations (up to 2 monitor stations)

1-3

Wiring Distance

* DP = Distribution Point

Diameter of wires	0.65 mm (22 AWG)	0.8 mm (20 AWG)	1.0 mm (18 AWG)
GH-BC - DP	-	5 m (16')	-
DP - GH-DA	-	300 m (980')	-
GH-VBC - GH-VA	150 m (490')	300 m (980')	-
GH-MK - DP	-	300 m (980')	-
DP - farthest residential station (R1-R2) (Includes system with GH-4Z)	-	300 m (980')	-
GH-VBC - farthest residential station (1 monitor units/residence) (Includes system with GH-4Z)	100 m (330')	150 m (500')	-
GH-VBC - farthest residential station (2 monitor units/residence) (Includes system with GH-4Z)	50 m (165')	100 m (330')	150 m (500')
GH-VBC (SW: STD) - GH-VBC (SW: EXP)	100 m (330')	150 m (500')	-
GH-BC - power supply	-	5 m (16')	5 m (16')
GH-VBC - power supply	-	5 m (16')	5 m (16')
GH-NS - power supply	-	300 m (980')	300 m (980')
GH-MK - power supply	-	300 m (980')	300 m (980')
Common trunk line (Maximum 2 trunk lines) total wiring length per trunk line	-	2500 m (8200')	-
Sub trunk line (Maximum 4 trunk lines) total wiring length per trunk line	-	2500 m (8200')	-
GH-BC - GH-BCX	-	5 m (16')	-
GH-VBC -GH-VBX	-	150 m (500')	-
GH-DA - GH-BCX	-	300 m (980')	-
GH-VA - GH-VBX	150 m (500')	300 m (980')	-
GH-BCX - farthest residential station (R1-R2) (Includes system with GH-4Z)	-	300 m (980')	-
GH-VBX - farthest residential station (1 monitor units/residence) (Includes system with GH-4Z)	100 m (330')	150 m (500')	-
GH-VBX - farthest residential station (2 monitor units/residence) (Includes system with GH-4Z)	50 m (165')	100 m (330')	150 m (500')

DISTRIBUTED BY: www.leedan.com info@leedan.com Toll-Free: 800-231-1414

2 MOUNTING

2-1

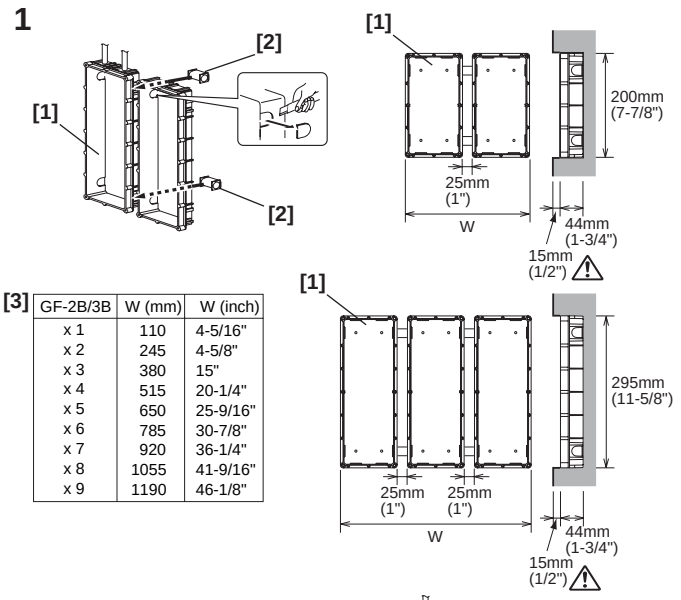

[3]

GF-2B/3B	W (mm)	W (inch)
x 1	110	4-5/16"
x 2	245	4-5/8"
x 3	380	15"
x 4	515	20-1/4"
x 5	650	25-9/16"
x 6	785	30-7/8"
x 7	920	36-1/4"
x 8	1055	41-9/16"
x 9	1190	46-1/8"

Mounting the Entrance Station (1)

[1] Back box
[2] Joint pipe
[3] Back box assembly dimensions
[4] Special screwdriver (enclosed with GH-BC)

1. Mounting the back box
- Make a hole for the cable.
- Use the joint pipe to assemble the back box.
- Make sure the back box is mounted level.
- Mount the camera and GH-NS module at eye-level for the average height of an adult.

⚠ Do not mount the back box on a surface that is recessed by 15 mm (1/2") or more from the external surface of the wall.

2. Set up the modules.
- For information on what modules can be used, see full Installation Manual provided on CD, pg. 10

⚠ 6 GH-SW modules can be used. If you would like to connect 7 modules or more, please contact Aiphone.

3. Mount each module panel to the front frame.
- Mount the panels from behind the front frame.
- Insert the notch into the slots on both sides and slide it downward.

4. Mount each module to the mounting bracket.
- Set the modules in the mounting bracket until they click in place.

5. Options
a. Rain hood GF-H
b. Surface-mount box GF-202B
c. Hooded surface-mount box GF-HB
d. 80 cm (32") connection cable GF-C

2-2

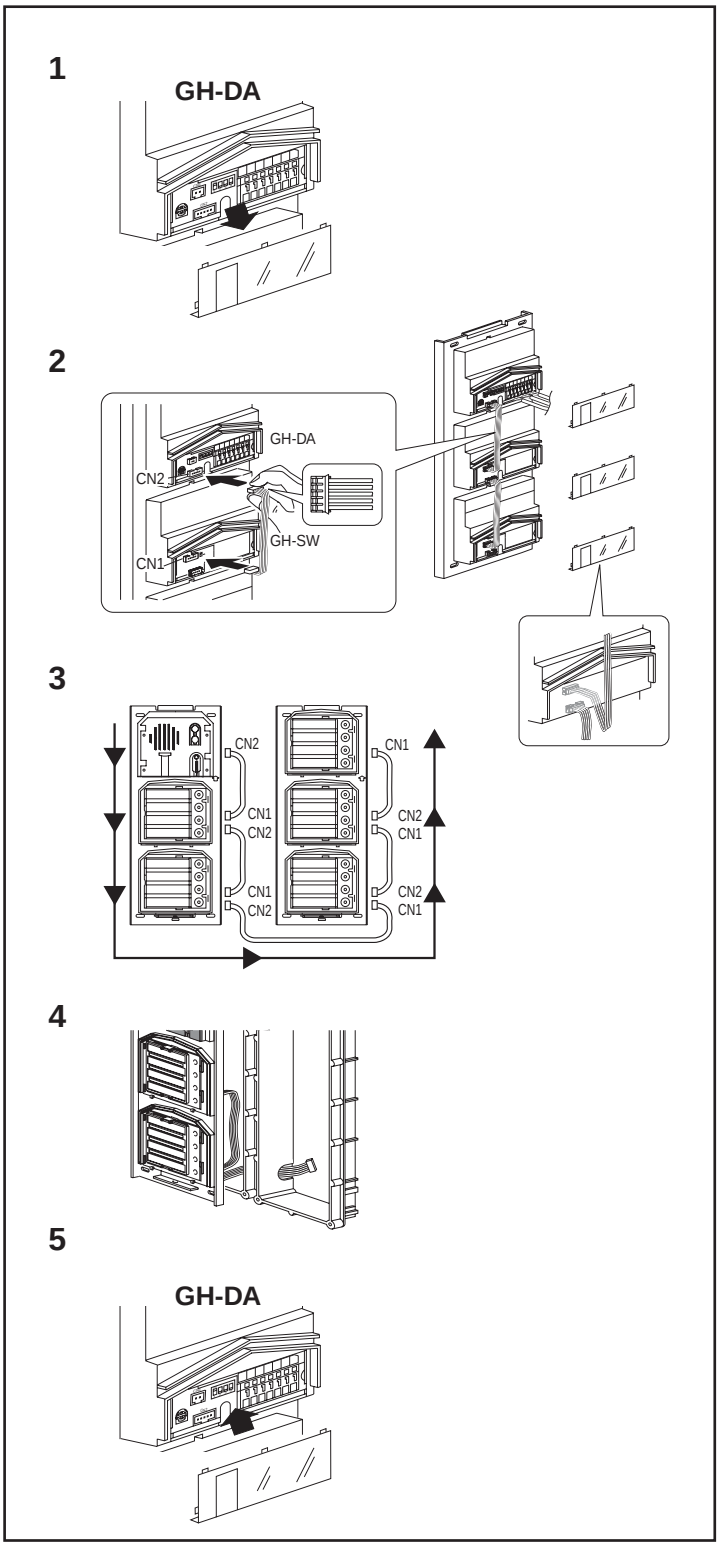

Mounting the Entrance Station (2)

1. Remove the terminal cover.
2. From the speech module to the next module, insert the attached connector into the socket. Make sure to run the cable under the terminal cover for protection.
3. Plug in the ribbon cables between modules in a daisy-chained manner.
4. Run the connection cable through the joint pipe (which you should have made open in advance) and connect CN1 of GH-SW to the next row.
5. Put back the terminal cover.

2-3

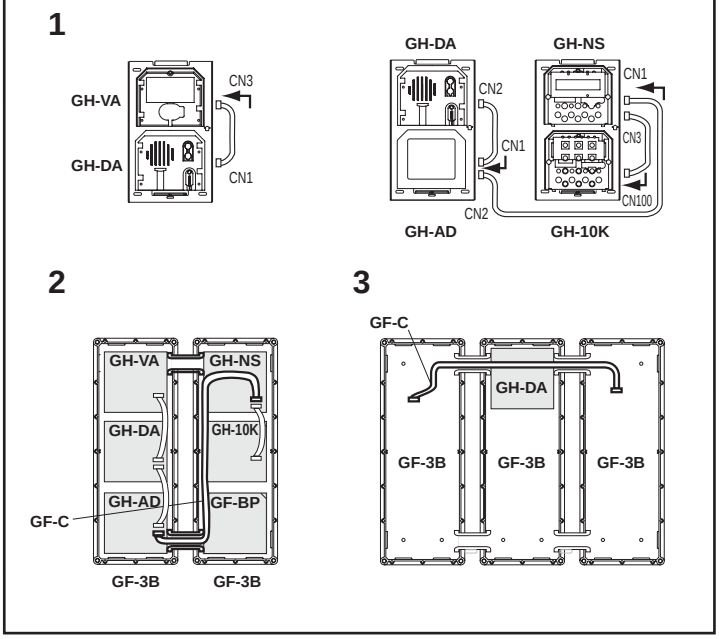

Mounting the Entrance Station (3)

1. Example of interconnection of modules.
2. Use GF-C to connect to the name scrolling module.
3. To position the speech module in the center row, run GF-C through the joint pipe in advance.

DISTRIBUTED BY: www.leedan.com info@leedan.com Toll-Free: 800-231-1414

2-4

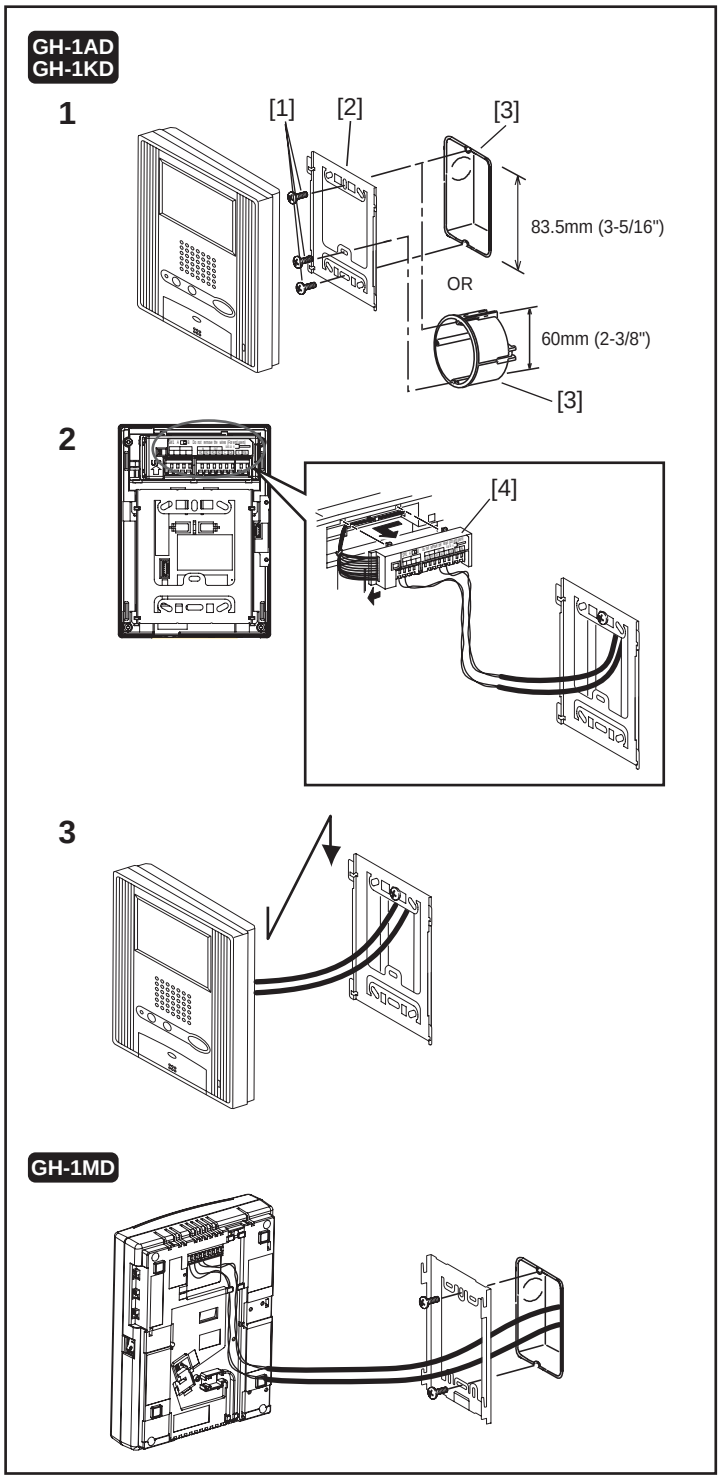

Residential Station

[1] Mounting screws (x2)
[2] Mounting bracket
[3] 1-gang box or round back box
[4] Terminal block (GH-1AD, GH-1KD)

1. Mount the mounting bracket on the 1-gang box.
2. Connect the wiring to the terminal block.
3. Mount the station unit to the mounting bracket.

⚠ Strip away the jacket of the cable and insert all wires into the slots in an orderly fashion. Failure to do so could result in pinching that may damage the wiring.

NOTES: To remove the terminal block, slide the terminal block and pull it out. (GH-1AD, GH-1KD)

2-5

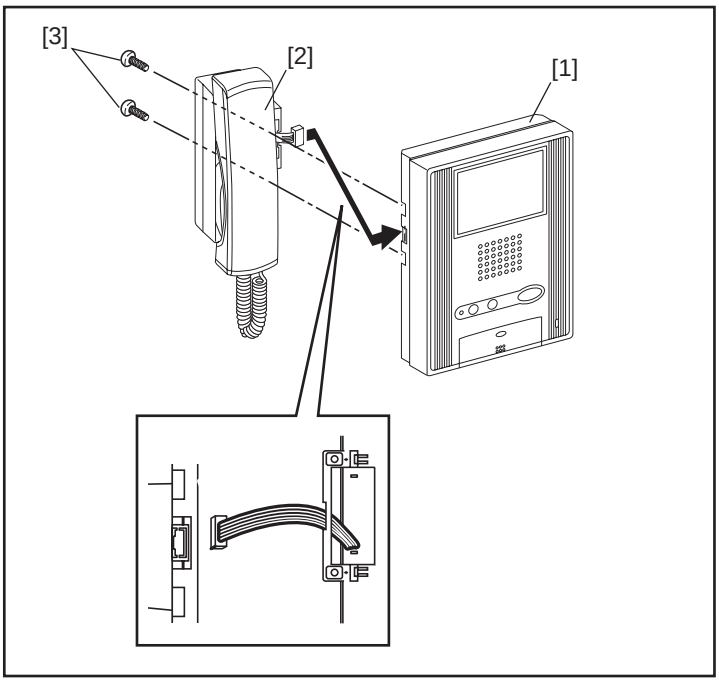

Optional Handset

[1] Chassis
[2] Handset (GH-HS)
[3] Screws (x2)

- Connect the station unit joint connector.

⚠ GH-HS can be installed only for the color monitor residential station (GH-1KD).

DISTRIBUTED BY: www.leedan.com info@leedan.com Toll-Free: 800-231-1414

3 WIRING

3-1

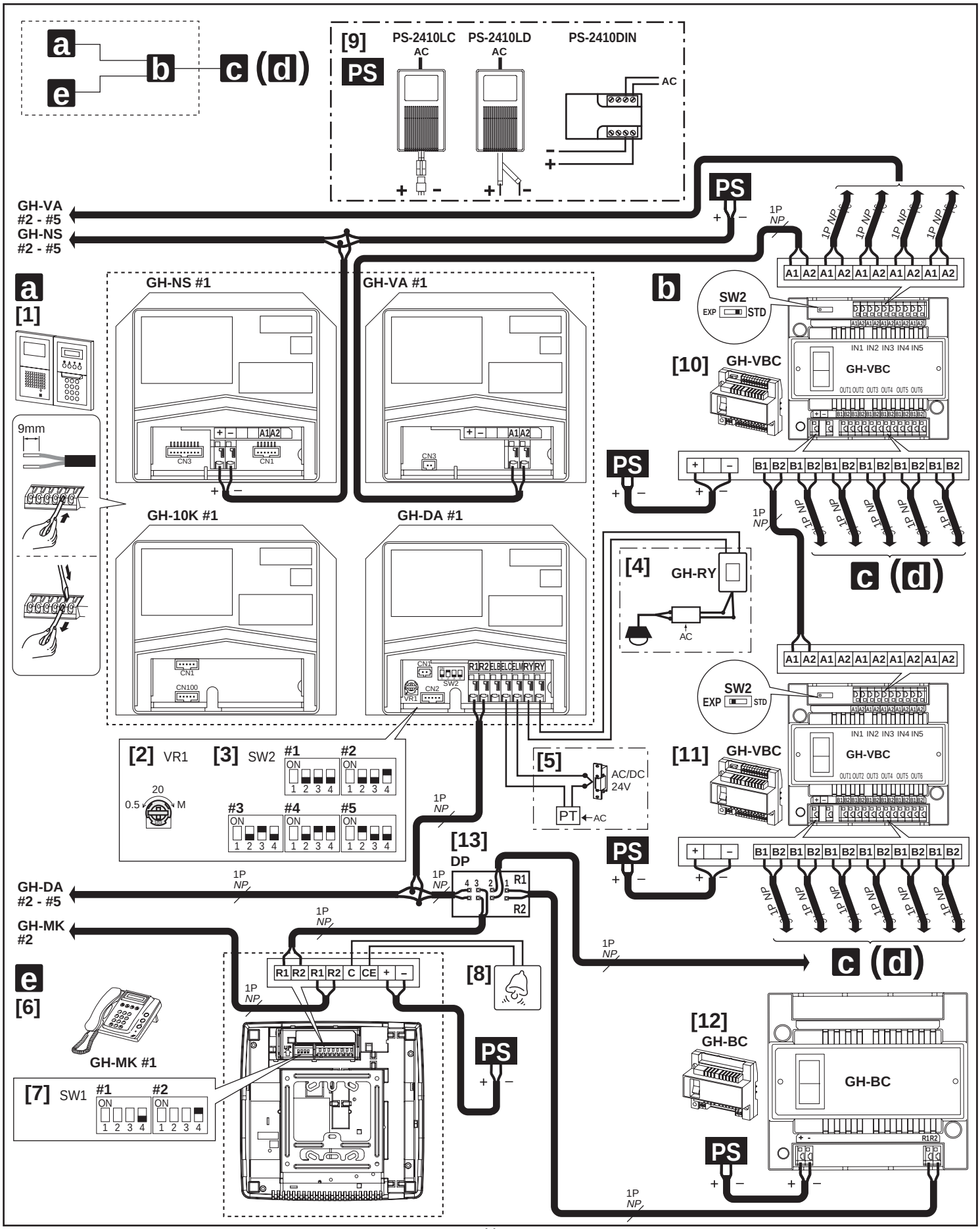

DISTRIBUTED BY: www.leedan.com info@leedan.com Toll-Free: 800-231-1414

3-2

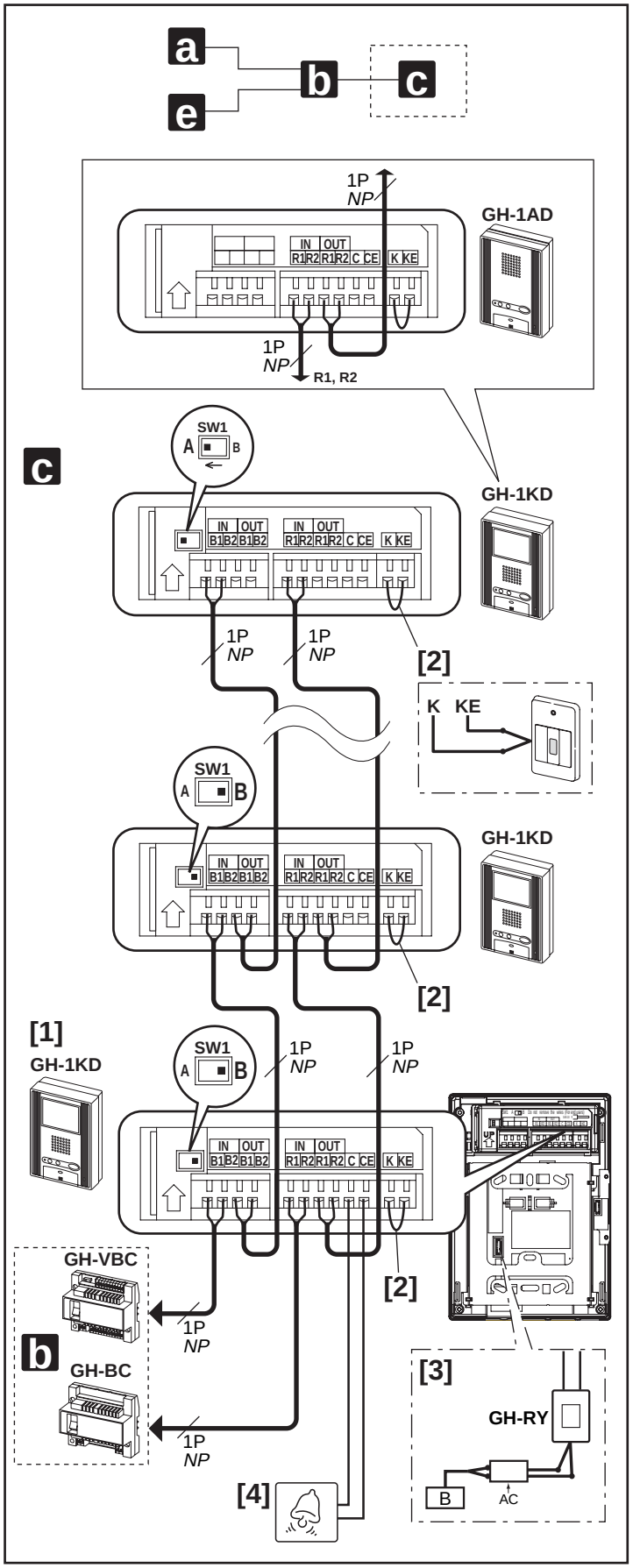

3-1

Standard System (1)

[1] Entrance Station

[2] Door release timer (set to "M" at time of shipment)

- Set the duration for the door release function when the door release button is pressed.
  [0.5] - [20]: 0.5 secs - 20 secs
  [20] - [M]: Activates while the button is pressed.

[3] Setting switch (GH-DA)

- SW2: 1: Setting switch for camera entrance station monitoring function (set to OFF at time of shipment)
  ON (Up): Monitored.
  OFF (Down): Skipped at time of entrance station monitoring.
- SW2: 2 - 4: Entrance station number setting switch (set to #1 at time of shipment)

[4] External relay GH-RY
For details, see full Installation Manual provided on CD, pg. 23.

[5] Door release relay contact
Less than AC/DC 24 V, 4 A (resistance load)

[6] Security guard station GH-MK

[7] Setting switch (GH-MK)

- SW1: 1: Password reset switch
  Set the password reset switch to ON for 2 seconds or more during standby will reset the password (set to "*1111" at time of shipment).
- SW1: 2, 3: Unused switch
- SW1: 4: Security guard station number setting switch (set to #1 at time of shipment)

[8] Doorbell button

[9] Power supply adapter PS-2410LC, PS-2410LD, PS-2410DIN

[10] Video bus control unit GH-VBC (SW: STD)

[11] Video bus control unit GH-VBC (SW: EXP)

- To use GH-VBC as an extension adapter, set the setting switch to "EXP."

[12] Bus control unit GH-BC

[13] Distribution terminal (junction): sold separately

NP: Non-polarized

3-2

Standard System (2) Station-to-Station Wiring

[1] Residential station GH-1KD, GH-1AD

- There can be a maximum of 25 stations per system.
- For the terminating residential station, set the setting switch to "A".

[2] Short lead

- To use the emergency alarm switch (see full Installation Manual provided on CD, pg. 41), disconnect the short lead and connect the switch.

[3] External relay GH-RY
For details, see full Installation Manual provided on CD, pg. 23.

[4] Doorbell button

⚠1. Do not mix station-to-station wiring with homerun wiring.

⚠2. Station-to-station wiring is not possible for GH-1MD.

NP: Non-polarized

DISTRIBUTED BY: www.leedan.com info@leedan.com Toll-Free: 800-231-1414

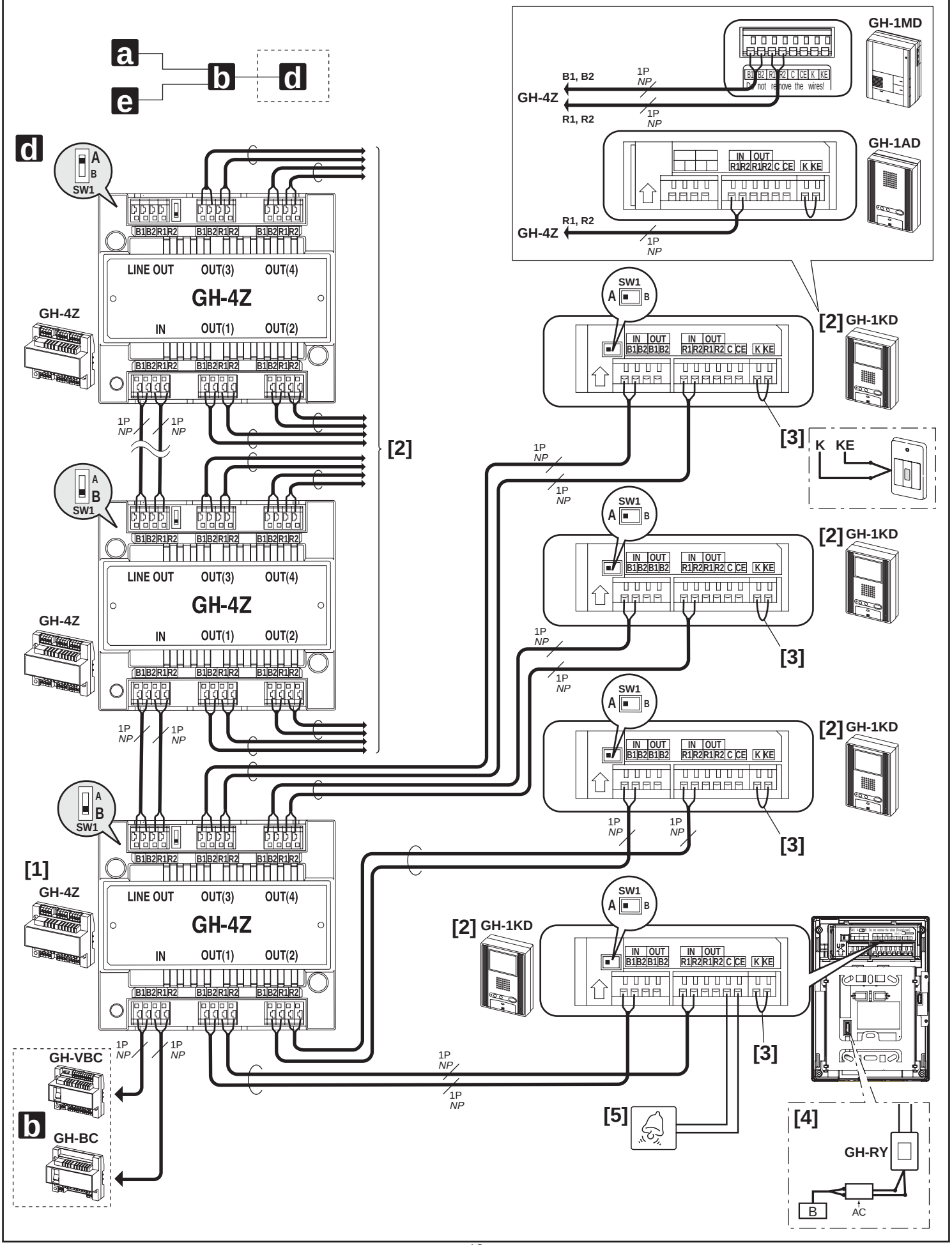

DISTRIBUTED BY: www.leedan.com info@leedan.com Toll-Free: 800-231-1414

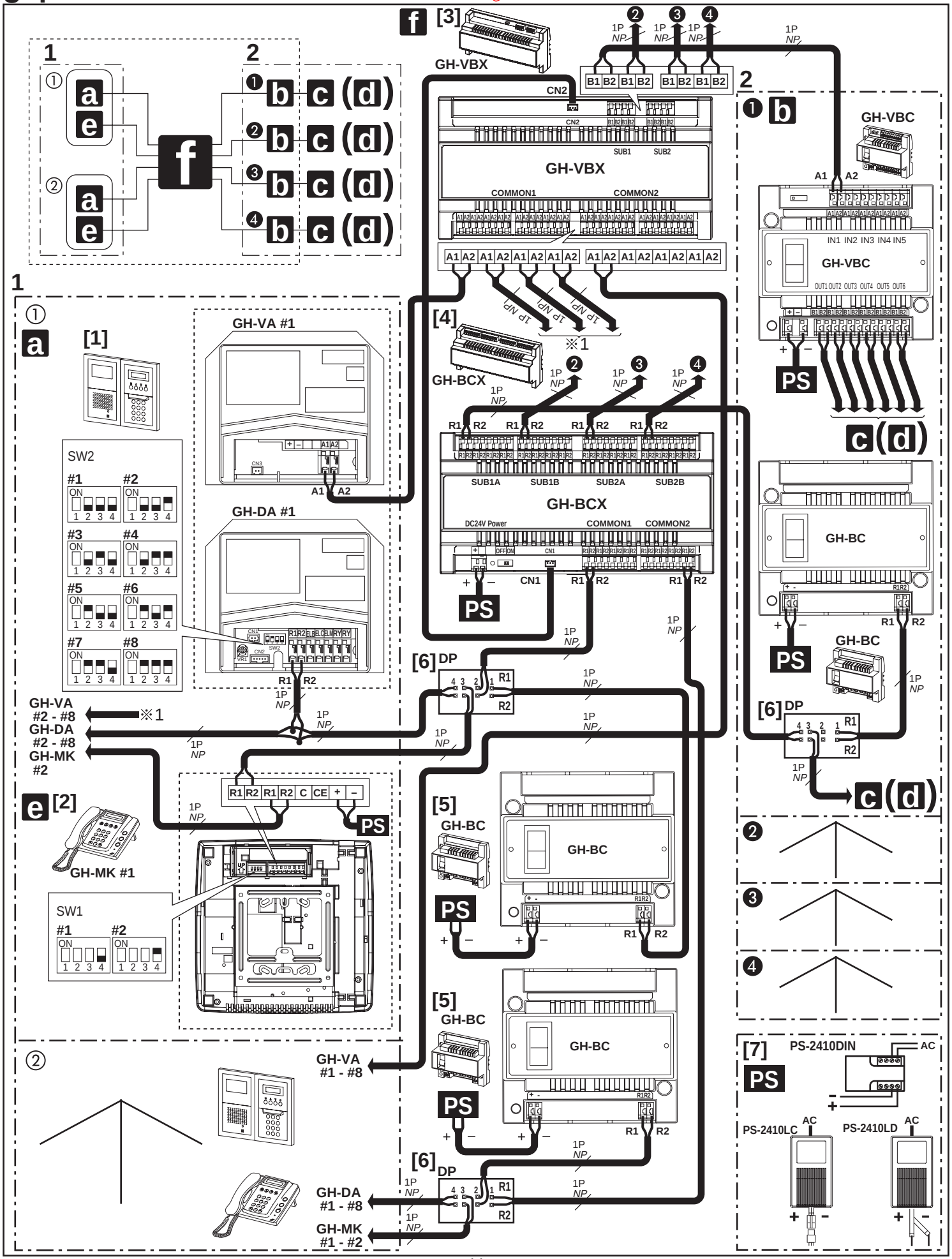

DISTRIBUTED BY: www.leedan.com info@leedan.com Toll-Free: 800-231-1414

4 PROGRAMMING

4-1

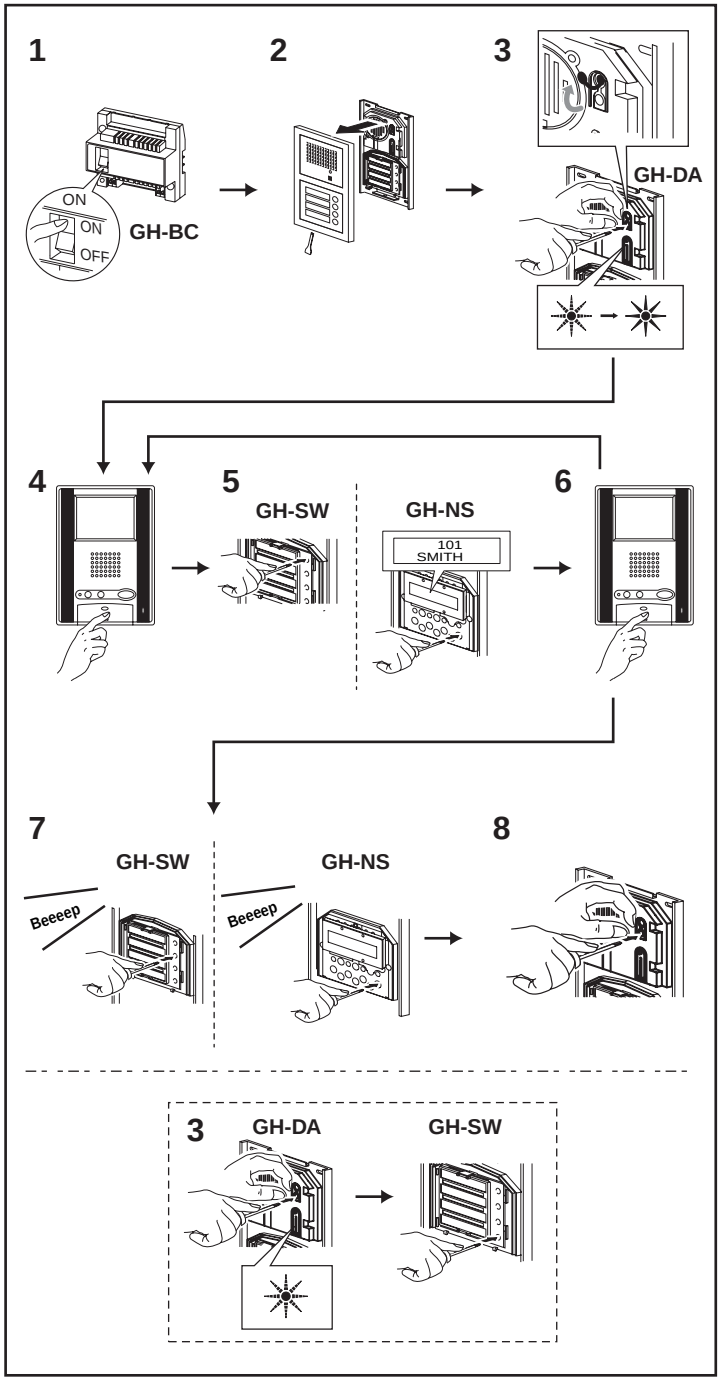

Setting up the System

1. Make sure that all units are installed and wired properly. Turn on the power switch to GH-BC. When the system includes GH-NS, program the resident information (names and room numbers) in advance. (For details, see 4-2)
2. Loosen the base screw and open and remove the front panel.
3. Set the system to program mode.
   - Lift up the rubber cap.
   - Press the program switch once. Use any long thin tool, such as a fine screwdriver.
   - The In-Use LED will blink for approximately 15 seconds for entrance stations with GH-SW and between approximately 6 to 15 seconds for entrance stations with GH-NS.
4. Once the In-Use LED is lit solid, press the talk button of the first residential station. The corresponding communication channel will be established.
5. For GH-SW, press the (corresponding) call button and release quickly. (***Do not press the button longer than 1 second***) For GH-NS, display the assigned room No. and press the call button (bell symbol). (***Do not press the button longer than 1 second***) An electronic beep will be emitted once.
6. Press the talk button to end. Repeat these steps and program all residential stations.

* If there is a second residential station installed in a single apartment, program the residential station following the same method detailed in steps 4 through 6. An electronic beep will be emitted twice. An electronic sound will be emitted three times for a third residential station and four times for a fourth residential station.

7. Correcting or changing the settings
   - Press and hold down the call button of GH-SW or GH-NS until you hear a continuous beep. For GH-NS, display the room you want to correct and reprogram all the residential stations in the single apartment (following steps 4 and following).
8. Ending programming
   - Push the GH-DA program switch. The In-Use LED will go off.
   - Replace the cap.
9. Checking the programming
   - Pressing the program switch for 5 seconds or more will light up the In-Use LED.
   - In the case of GH-SW, an electronic beep will be emitted once when the programming was successful. If the programming was unsuccessful, an alarm beep will be emitted.
   - For GH-NS, use the arrow keys or 10-key to select the room and press the call button. An electronic sound will be emitted once when the programming was successful. If the programming was unsuccessful, an alarm sound will be emitted.
   - Press the programming switch to end the check.

⚠ If power supply is interrupted during programming, the programmed information might be lost. In such cases, retry the programming again from the beginning.

NOTES: 1. Setting up the light button (GH-SW) In Step 3, press the call button of the assigned GH-SW while the In-Use LED is blinking (within 15 seconds in program mode), the light button will be set up. (The assigned call button cannot be used as the residential call button simultaneously.) An electronic beep will be emitted once.

2. If you attempt to setup a fifth residential station when four residential stations have already been established, an alarm beep will be emitted. To cancel the communication link, display the assigned name and press the call button for at least 3 seconds. A continuous beep will be emitted to verify the communication link has been cleared.

DISTRIBUTED BY: www.leedan.com info@leedan.com Toll-Free: 800-231-1414

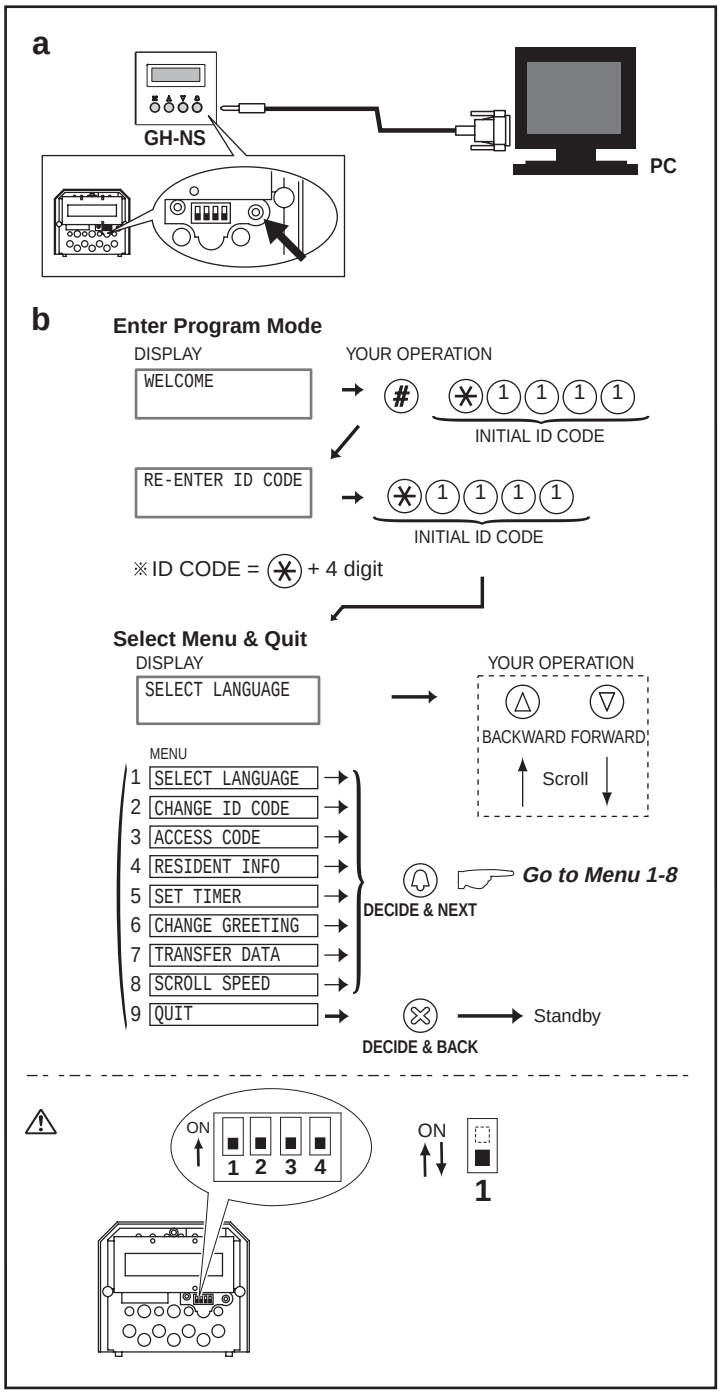

Programming (GH-NS)

a. Programming with a PC

- You can use a PC to enter data and write in or change resident names.
- Use the connection cable that comes with GH-NS to connect your PC to GH-NS.
- In your PC, install the setup tool program from the CD that comes with the GH-BC.

* For information on how to use the setup tool, see the text (.txt) file that is installed in the same folder as the setup tool (.exe).

b. Programming with GH-NS and GH-10K

- Confirm that "Welcome" is shown on the Display, indicating that the system is in standby mode.

* You can change the "Welcome" text.

- First, set the system to program mode. (For details, see above.)

* Before you begin programming, we recommend that you register a new exclusive ID code for yourself so that the system is not accessed by others. (For details, see 4-3)

⚠ If you have forgotten your ID code, set the switch (#1) to ON for approximately 2 seconds. The ID code will be reset to the default setting of "∗1111".

4-3

1

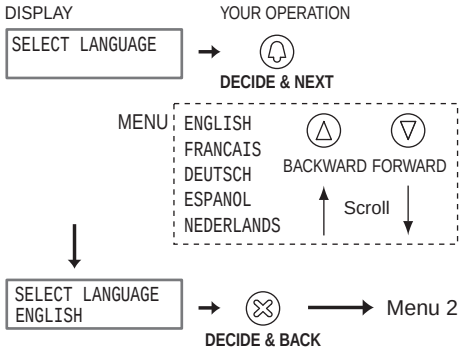

2

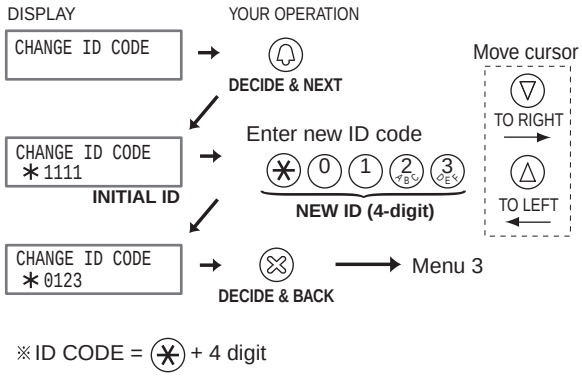

※ID CODE = ✳ + 4 digit

3

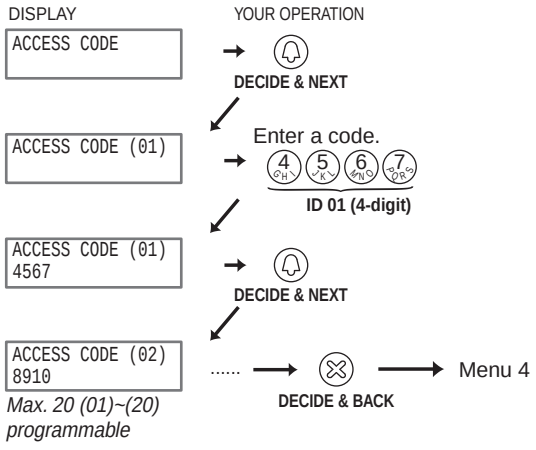

Max. 20 (01)~(20) programmable

4

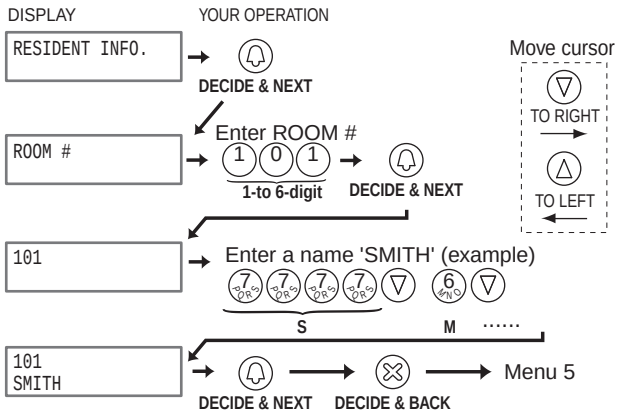

5

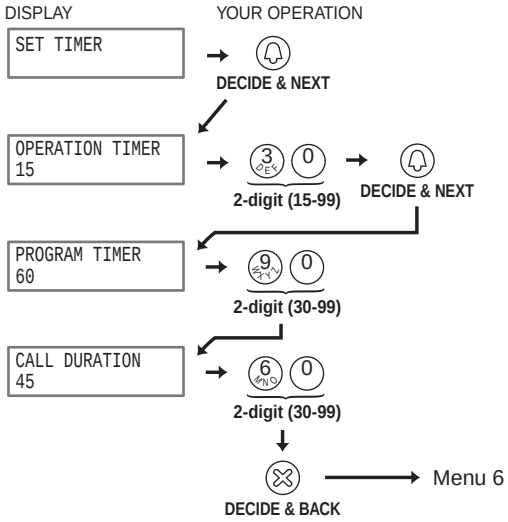

6

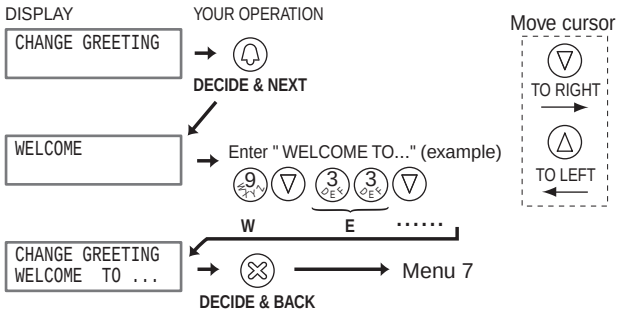

7

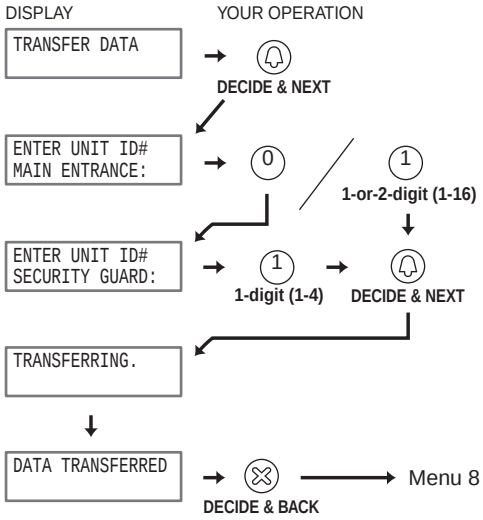

8

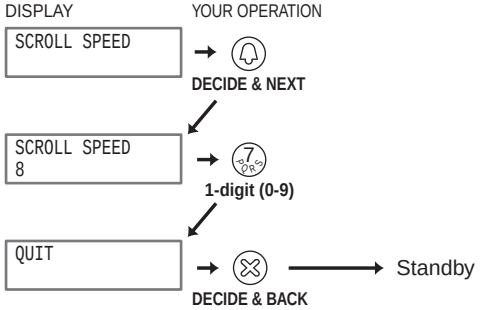

4-4

a

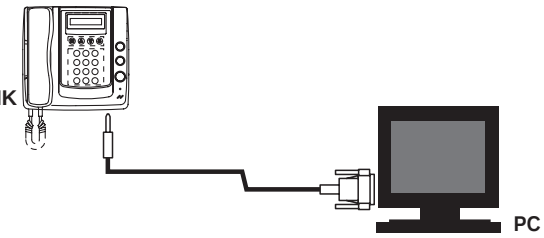

b **Enter Program Mode**

DISPLAY: AIPHONE → (#) (✱)(1)(1)(1)(1) INITIAL ID CODE

DISPLAY: RE-ENTER ID CODE → (✱)(1)(1)(1)(1) INITIAL ID CODE

※ID CODE = (✱) + 4 digit

Select Menu & Quit

DISPLAY: SELECT LANGUAGE

YOUR OPERATION: (△) (▽) BACKWARD FORWARD; Scroll (↑↓)

MENU

1 SELECT LANGUAGE →
2 CHANGE ID CODE →
3 RESIDENT INFO →
4 SET TIMER →
5 PROGRAMMING →
6 TRANSFER DATA →
7 VERIFY PROGRAM →
8 QUIT

(🔔) DECIDE & NEXT — *Go to Menu 1-7*

(⊗) DECIDE & BACK → Standby

1 **Menu 5**

DISPLAY: PROGRAMMING<<

YOUR OPERATION: (🔔) DECIDE & NEXT

DISPLAY: PROGRAMMING<< / CONNECTING...

DISPLAY: PROGRAMMING<< / CONNECTING... → (⊗) DECIDE & BACK → Menu 6

⚠1

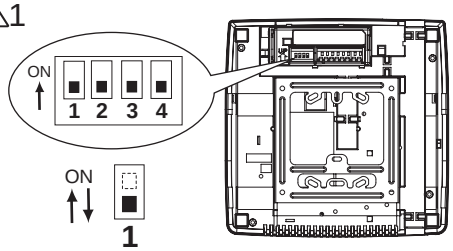

2

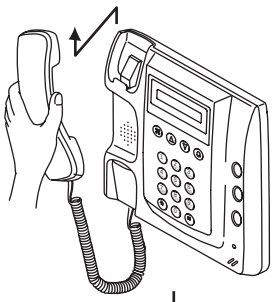

3

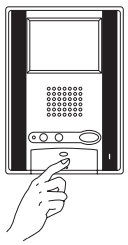

4

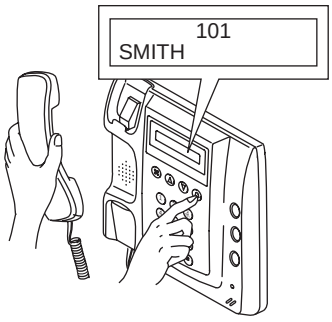

5

6

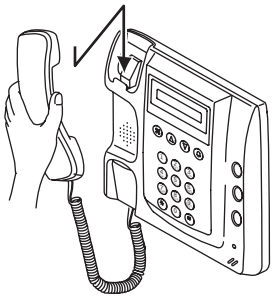

4-5

1

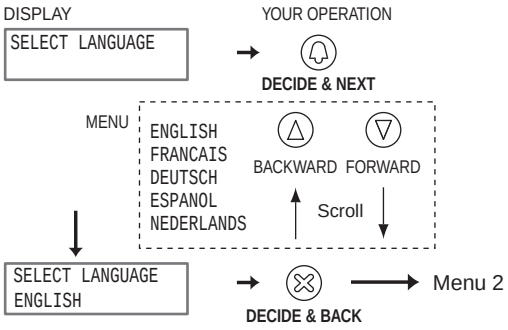
DISPLAY
YOUR OPERATION
SELECT LANGUAGE
DECIDE & NEXT
MENU
ENGLISH
FRANCAIS
DEUTSCH
ESPANOL
NEDERLANDS
BACKWARD
FORWARD
Scroll
SELECT LANGUAGE
ENGLISH
DECIDE & BACK
Menu 2

2

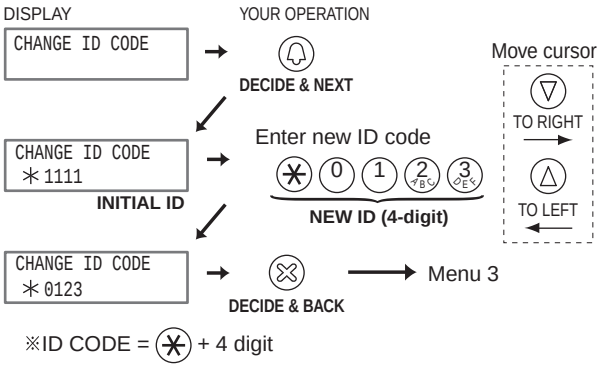
DISPLAY
YOUR OPERATION
CHANGE ID CODE
DECIDE & NEXT
Move cursor
TO RIGHT
TO LEFT
CHANGE ID CODE
✳1111
INITIAL ID
Enter new ID code
NEW ID (4-digit)
CHANGE ID CODE
✳0123
DECIDE & BACK
Menu 3
※ID CODE = ✳ + 4 digit

3

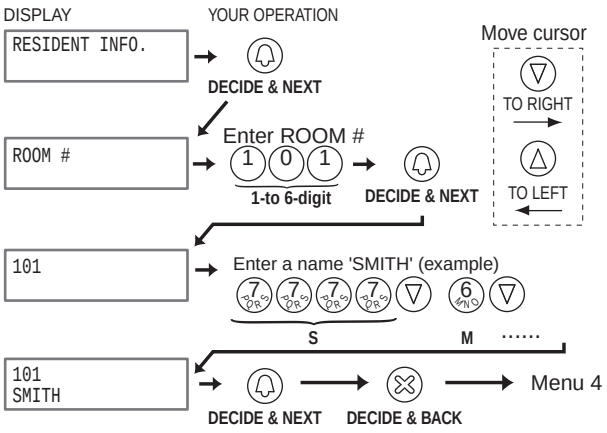
DISPLAY
YOUR OPERATION
RESIDENT INFO.
DECIDE & NEXT
Move cursor
TO RIGHT
TO LEFT
ROOM #
Enter ROOM #
1-to 6-digit
DECIDE & NEXT
101
Enter a name 'SMITH' (example)
S
M
101
SMITH
DECIDE & NEXT
DECIDE & BACK
Menu 4

4

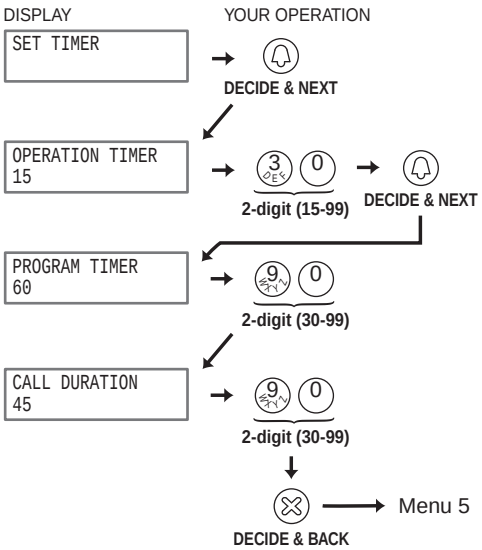
DISPLAY
YOUR OPERATION
SET TIMER
DECIDE & NEXT
OPERATION TIMER
15
2-digit (15-99)
DECIDE & NEXT
PROGRAM TIMER
60
2-digit (30-99)
CALL DURATION
45
2-digit (30-99)
DECIDE & BACK
Menu 5

5

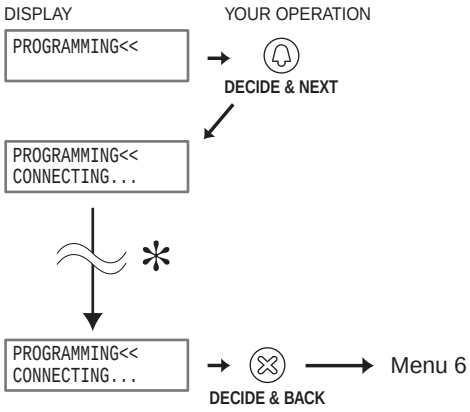
DISPLAY
YOUR OPERATION
PROGRAMMING<<
DECIDE & NEXT
PROGRAMMING<<
CONNECTING...
PROGRAMMING<<
CONNECTING...
DECIDE & BACK
Menu 6

6

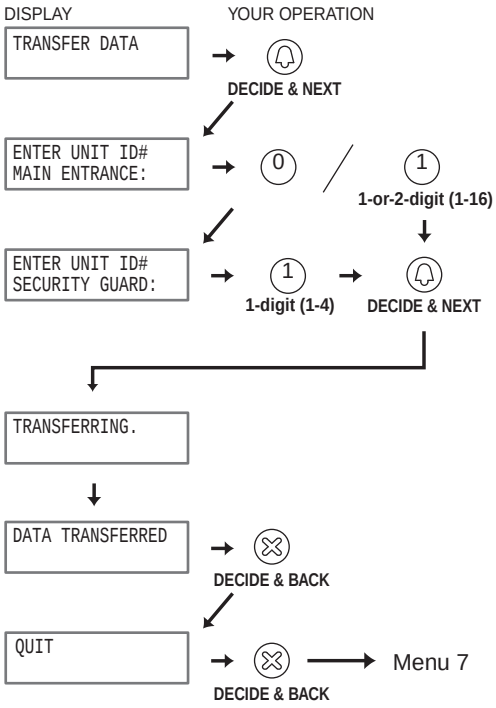
DISPLAY
YOUR OPERATION
TRANSFER DATA
DECIDE & NEXT
ENTER UNIT ID#
MAIN ENTRANCE:
1-or-2-digit (1-16)
ENTER UNIT ID#
SECURITY GUARD:
1-digit (1-4)
DECIDE & NEXT
TRANSFERRING.
DATA TRANSFERRED
DECIDE & BACK
QUIT
DECIDE & BACK
Menu 7

7

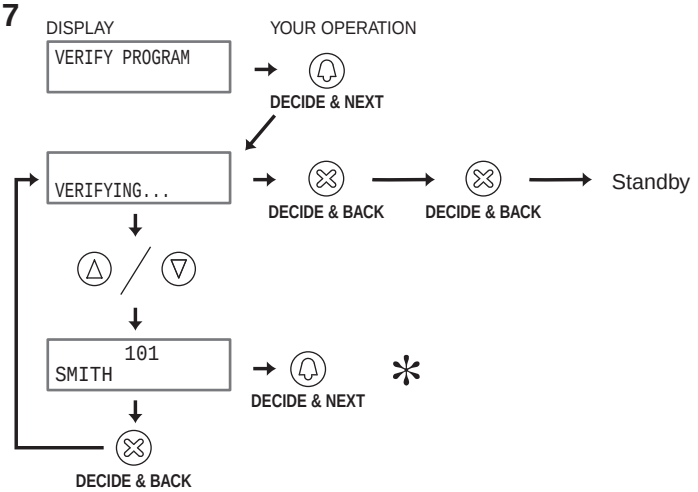
DISPLAY
YOUR OPERATION
VERIFY PROGRAM
DECIDE & NEXT
VERIFYING...
DECIDE & BACK
DECIDE & BACK
Standby
101
SMITH
DECIDE & NEXT
DECIDE & BACK

DISTRIBUTED BY: www.leedan.com info@leedan.com Toll-Free: 800-231-1414

5 TECHNICAL PRECAUTIONS

Technical precautions

- Operating temperature: Entrance Station: -10 - 60 °C
  Residential Station: 0 - 40 °C
  Security Guard Station: 0 - 40 °C
  Control Unit: 0 - 40 °C
- Mounting location: Do not install the entrance station in a place where there would be a bright light behind a visitor (or where there would be a bright background) or in a place where the camera lens would be directly exposed to sunlight or a bright light.
- Rain hood (option): Although the entrance station is weather resistant, it is recommended that it not be directly exposed to weather conditions. The rain hood (GF-H) can be installed to protect the entrance station from rainfall.
- Post-replacement setup: After all wiring is completed and the residential station has been replaced, turn off the power to GH-BC temporarily and then turn it back on. Next, reprogram the relevant residential station.
- Operation: When an entrance station is calling a residential station, the call tone from the doorbell button will not sound.
- Cleaning: Clean the units with a soft cloth dampened with a neutral household cleanser. Never use an abrasive cleanser or cloth.
- Repair requests: When units do not operate normally, request repairs from a qualified technician.

Technical Support: **Monday - Friday**
PH: (800) 692-0200 6:00AM to 4:30PM
FAX: (800) 832-3765 (Pacific Time)
E-mail tech-serv@aiphone.com

For live, internet communication with Aiphone during business hours, visit us at
www.aiphone.com/quikchat.htm

Aiphone Communication Systems
1700 130th Ave. N.E.
Bellevue, WA 98005
(425) 455-0510
FAX (425) 455-0071

#94501 - QuikStart GH Installation Manual

6 SPECIFICATIONS

Specifications

- Power supply:
  DC 24V supplied by PS-2410LC, PS-2410LD, PS-2410DIN (for GH-BC, GH-VBC, GH-NS/10K, GH-MK, GH-BCX)
- Current consumption:
  GH-BC: 0.9 A, GH-VBC: 0.9 A, GH-NS: 0.13 A, GH-MK: 0.18 A, GH-BCX: 0.35 A
- Call tone:
  There are three different types of call tones:a call tone for the entrance station, a call tone for the security guard station and a call tone for the doorbell button.
- Communication route: Secure single channel
- Communication:
  Voice-actuated communication (or press-to-talk communication)
- Door release:
  Connecting terminals: Between ELM-ELC (N/O) and ELB-ELC (N/C)
  Specifications: less than 4A (resistance load), AC/DC 24V, dry closure contact for door release
- Wiring: 2 pair cables
- Type of cables:
  Pair cable (solid wire not stranded), polyethylene insulated, diameter 0.65 1.0 mm
- Dimensions:

GH-1MD:	160 (W) x 210 (H) x 55.5 (D) mm (6-5/16 x 8-1/4 x 2-3/16 inch)
GH-1AD:	125 (W) x 175 (H) x 32 (D) mm (4-15/16 x 6-14/16 x 1-1/4 inch)
GH-1KD:	125 (W) x 175 (H) x 32 (D) mm (4-15/16 x 6-14/16 x 1-1/4 inch)
GH-BC:	122.5 (W) x 108.5 (H) x 61 (D) mm (4-13/16 x 4-1/4 x 2-3/8 inch)
GH-VBC:	122.5 (W) x 108.5 (H) x 61 (D) mm (4-13/16 x 4-1/4 x 2-3/8 inch)
GH-4Z:	122.5 (W) x 108.5 (H) x 61 (D) mm (4-13/16 x 4-1/4 x 2-3/8 inch)
GH-MK:	215 (W) x 210 (H) x 69 (D) mm (8-7/16 x 8-1/4 x 2-3/4 inch)
GH-BCX:	210 (W) x 108.5 (H) x 61 (D) mm (8-1/4 x 4-1/4 x 2-3/8 inch)
GH-VBX:	210 (W) x 108.5 (H) x 61 (D) mm (8-1/4 x 4-1/4 x 2-3/8 inch)
Entrance Station	
2 module, 2 row panel:	270 (W) x 225 (H) x 16 (D) mm (10-5/8 x 8-7/8 x 5/8 inch) (Box depth: 44mm (1-3/4"))
3 module, 1 row panel:	135 (W) x 320 (H) x 16 (D) mm (15-5/16 x 12-5/8 x 5/8 inch) (Box depth: 44mm (1-3/4"))

- Weight:
  GH-1MD: Approx. 980 g (2.2 lbs.)
  GH-1AD: Approx. 330 g (0.7 lbs.)
  GH-1KD: Approx. 400 g (0.9 lbs.)
  GH-BC: Approx. 450 g (1.0 lbs.)
  GH-VBC: Approx. 250 g (0.6 lbs.)
  GH-4Z: Approx. 190 g (0.4 lbs.)
  GH-MK: Approx. 900 g (2.0 lbs.)
  GH-BCX: Approx. 400 g (0.9 lbs.)
  GH-VBX: Approx. 350 g (0.8 lbs.)